CONTROL LOGIC DIAGRAM
FOR TRANSFER LINE

Rev.	Date	Revisions description	DESIGNED	Checked	Approved
01	2020-Jun-27		N.Vahizadeh	F.NIKNAM	A.MOWAHED
A1	2020-May-06	FIRST ISSUED	N.Vahizadeh	F.NIKNAM	A.MOWAHED

FOR APPROVAL

Client: شرکت توسعه آهن و فولاد گل گهر
Golgohar Iron & Steel Development Co.
G.I.S.D.Co

Consultant:

BARSOO برسو
CONSULTING and PROJECT MANAGEMENT
شرکت مهندسین برسو

Job nr
Obsoleted from
Replaces

Project Name: Golgohar Steel Project

Family code/Machine code

Weight (Kg)

γ (Kg/m^3)

Title: CONTROL LOGIC DIAGRAM FOR TRANSFER LINE

Scale

Client DWG Number: S-SM01-D-BOP-WWTP-DWG-IN-006 — Revision: 01

Format: A3

No. of sheets: 14

BARSOO DWG Number: 157DUGA2070003-01 — Revision: 01

Sheet 1 OF 14 Follow

Document Revision

Page	A1	01	02	03	04	05	06	07	Page	A1	01	02	03	04	05	06	07
1	X	X							41								
2	X	X							42								
3	X	X							43								
4	X	X							44								
5	X	X							45								
6	X	X							46								
7	X	X							47								
8	X	X							48								
9	X	X							49								
10	X	X							50								
11	X	X							51								
12		X							52								
13		X							53								
14		X							54								
15									55								
16									56								
17									57								
18									58								
19									59								
20									60								
21									61								
22									62								
23									63								
24									64								
25									65								
26									66								
27									67								
28									68								
29									69								
30									70								
31									71								
32									72								
33									73								
34									74								
35									75								
36									76								
37									77								
38									78								
39									79								
40									80								

Rev.	Date	Revisions description	Checked	Approved
01	2020-jun-07		N.Mokhtabi	F.NIKNAM	A.MOMENEI
A1	2020-May-06	FIRST ISSUED	N.Mokhtabi	F.NIKNAM	A.MOMENEI

FOR APPROVAL

Client: شرکت توسعه آهن و فولاد گل گهر
Golgohar Iron & Steel Development Co.
G.I.S.D.Co

Consultant:

BARSOO CONSULTING and PROJECT MANAGEMENT
برسو
شرکت مهندسی

Job nr
Obsoleted from
Replaces

Project Name: Golgohar Steel Project

Family code/Machine code

Weight (Kg)

J (Kgm²)

Title: CONTROL LOGIC DIAGRAM FOR TRANSFER LINE

Scale

Client DWG Number: S-SM01-D-BOP-WWTP-DWG-IN-006 — Revision: 01

Format: A3

No. of sheets: 14

BARSOO DWG Number: 157DUGA2070003-01 — Revision: 01

Sheet: 2 OF 14 — Follow

LEGEND

SYMBOL	NAME	DESCRIPTION
———	PATH	Information path
AL	Alarm	Low priority alarm with proper text shall be displayed in HMI & Alarm list.
AH		High priority alarm with proper text shall be displayed in HMI & Alarm list.
E	Event	With proper text shall be displayed in Event list
F	CONNECTION	Flag address
G	INDICATION	Equipment Dynamic color shall be changed to green for G, & with proper text shall be displayed in Event list
R		Equipment Dynamic color shall be changed to red for R, & with proper text shall be displayed in Event list
Y		Equipment Dynamic color shall be changed to yellow for Y, & with proper text shall be displayed in Event list
W		Equipment Dynamic color shall be changed to white for W, & with proper text shall be displayed in Event list
I		"I" appears in lozenge when there isn't some Of interlocks , with double-click on lozenge , interlocks shall be displayed individually and some of them that impress shall be specified with red color. Maintenance user can block (jumper) each interlocks via HMI & all jumpers shall be reported.
"1"	ONE	Presence of Information
"0"	ZERO	Absence of information
A, B → ADD → C	ADD	Addition — Inputs: A, B; C: A+B
A — B	NOT	Not Gate — A: 1 0; B: 0 1
A — A — B	BUFFER	Buffer Gate — A: 1 0; B: 1 0
A, B, C → A → D	AND	And Gate — A B: 0 0, X 0, X X, 1 1; C D: X 0, X 0, 0 0, 1 1
A, B, C → OR → D	OR	Or Gate — A B: 1 X, X 1, X X, 0 0; C D: X 1, X 1, 1 1, 0 0
SR: A, B → S, R → Q → C	MEMORY	S-R Flip-Flop (Set Priority) — A B: 1 X, 0 1, 0 0; C: 1, 0, No Change
SR: A, B → S, R → Q → C		R-S Flip-Flop (Reset Priority) — A B: X 1, 1 0, 0 0; C: 0, 1, No Change
A — PO t — B	PULSE TIMER	The existence of logic input "A" regardless of its subsequent state, causes logic output "B" to exist immediately, "B" exists for time t and then terminates .
A — DI t — B	ON-DELAY TIMER	Delay Initiation of Output — The continuous existence of logic Input "A" for time "t" causes logic output "B" to exist when t expires, "B" terminates when "A" terminates .
A — DT t — B	OFF-DELAY TIMER	Delay Termination of Output — The existence of logic Input "A" causes logic output "B" to exist immediately, "B" terminates when "A" has terminated and has not again existed for time t .

SYMBOL	NAME	DESCRIPTION
I	Input	Input of function block
o	Output	Output of function block
	RECORDER	Analog recode to software element
	INDICATOR	Analog indication to software element
A, B → CMP =< → C	COMPERATOR	Greater Than or Equal to — Inputs Status: A <= B; C: 1, 0
A, B → CMP = → C		Equal to — Inputs Status: A=B; C: 1, 0
A, B → CMP => → C		Less Than or Equal to — Inputs Status: A >= B; C: 1, 0
HMI	Location of signals	Human Machine Interface
MCC		Motor Control Centre(for LV motors)
SWG		Switchgear (for MV motors)
Field		Location Is In Field(for Instruments)
LCB		Local Control Box
A — S — B	SET	Set Output — The Change of " A" from " 0" to " 1" Change The " B" to " 1"
A — R — B	RESET	Reset Output — The Change of " A" from " 0" to " 1" Change The " B" to " 0"
A, B, C → >=n → D	Qualified OR	Number of inputs that they are equal to 1 is equal or more than n output=1; Number of Inputs that they are equal to 1 is less than n output=0
W		White lamp is located on LCB
R		Red lamp is located on LCB
G		Green lamp is located on LCB
a b, A, B, C, D → Q	Multiplexer	
GATE, IN → ATG → OUT	Analogue signal transfer gate	Gate=ON → Out = IN; Gate=OFF → Out = 0
AI	Input	Analog Input
DI		Digital Input
AO	Output	Analog Output
DO		Digital Output

Rev.	Date	Revisions description	DESIGNED	Checked	Approved
01	2020-Jun-01		N.Valizadeh	F.MOHM	A.MOHAMED
A1	2019-Sep-02	FIRST ISSUED	N.Valizadeh	F.MOHM	A.MOHAMED

FOR APPROVAL

Client: شرکت ذوب آهن و فولاد گل گهر Golgohar Iron & Steel Development Co. G.I.S.D.Co

Consultant:

BARSOO — CONSULTING and PROJECT MANAGEMENT — برسو — شرکت مهندسی

Project Name: Golgohar Steel Project

Title: CONTROL LOGIC DIAGRAM FOR TRANSFER LINE

Client DWG Number: S-SM01-D-BOP-WWTP-DWG-IN-006

BARSOO DWG Number: 157DUGA2070003-01

Revision: 01

Format: A3

No. of sheets: 14

Sheet: 01 Follow: 3 OF 14

FUNCTION BLOCK FOR MOTOR

FUNCTION BLOCK DESCRIPTION

ONE DIRECTION MOTOR PUMP -FB

INPUT

TYPE	SIGNAL TAG
LOCATION	DESCRIPTION
	Motor Stopping Alarm
	Feeder Fault Alarm
	Motor Starting Alarm
	Feeder Isolator disconnect
	Motor running mode
	Motor local mode
LCB	Start PB
	Start Interlocks
F	Motor Remote Mode
HMI	Auto/Man. Selector Switch (Auto=1)
HMI	Motor Start PB
	Auto Start Com.
LCB	Stop PB
HMI	Motor Stop PB
	Process Interlocks
	Auto Stop Com.
HMI	Auto/Man. Selector Switch (Auto=1)
	Protection Interlocks
LCB	EMG Stop PB.
MCC	Availability
MCC	Running Contact
MCC	Fault Contact
	Start Com.
MCC	Running Contact
HMI	Local/Remote Selector (Remote=1)
LCB	Local/Remote Selector(Remote=1)
	Start Fault Timing
	Stop Fault Timing
MCC	Running Contact

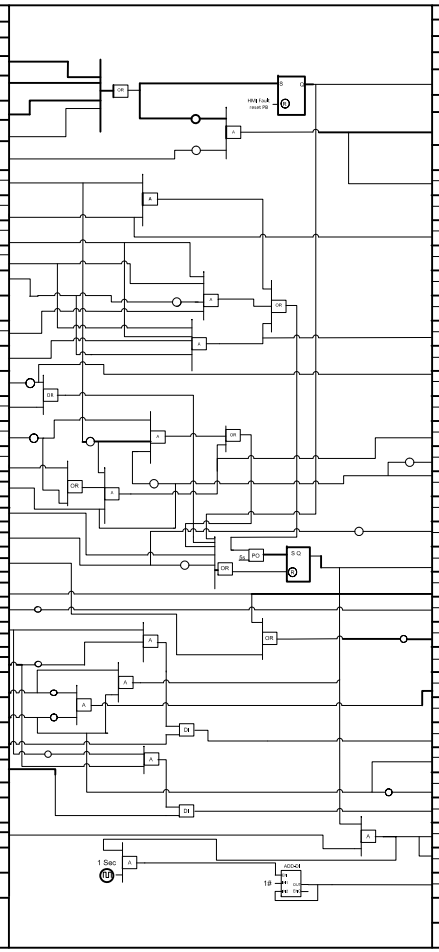

OUTPUT

TYPE	SIGNAL TAG
LOCATION	DESCRIPTION
Motor Fault Indication	HMI
Motor Stop Indication	HMI
Motor Stop Mode	E HMI
Local Start PB Pressed	E HMI
Auto Start	E HMI
Local Stop PB Pressed	E HMI
Auto Stop	E HMI
Motor In Manual mode	E HMI
Motor In Auto mode	E HMI
EMG Stop PB Pressed	E HMI
Command.	E HMI/MCC
Run contact	E HMI
Feeder Fault Alarm	AH HMI
Feeder Isolator disconnect	AH HMI
Motor remote Mode	E HMI
Motor Local Mode	E HMI
Motor Starting Alarm	AH HMI
LCB In remote mode	E HMI
LCB In Local mode	E HMI
Motor Stopping Alarm	AH HMI
Motor Running Ind.	HMI
Motor Running Mode	E HMI
Motor Working Time	HMI

Rev.	Date	Revisions description			
01	2019-Jun-01		N.Vakilzadeh	M.NIKNM	A.MOHAMED
A1	2009-May-06	FIRST ISSUED	N.Vakilzadeh	F.MIKNM	A.MOHAMED
			DESIGNED	Checked	Approved

FOR APPROVAL

Client: شرکت توسعه آهن و فولاد گل گهر Golgohar Iron & Steel Development Co. G.I.S.D.Co

Consultant:

BARSOO برسو شرکت مهندسی

Job nr

Obtained from

Replaces

Project Name: Golgohar Steel Project

Family code/Machine code

Weight (Kg)

J (kgm²)

Title: CONTROL LOGIC DIAGRAM FOR TRANSFER LINE

Scale

Client DWG Number: S-SM01-D-BOP-WWTP-DWG-IN-006

Revision: 01

Format: A3

No. of sheets: 4

BARSOO DWG Number: 157DUGA2070003-01

Revision: 01

Sheet: 4 OF 14

Folio

FUNCTION BLOCK FOR MOTOR CONTINUED

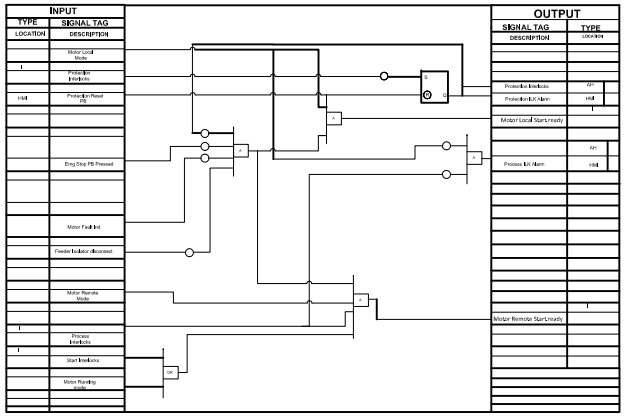

Note: "Auto/Man. Selector Switch (Auto=1)" shall be linkable .

Rev.	Date	Revisions description	DESIGNED	Checked	Approved
01	2020-Jun-27		N.Vakilzadeh	F.MOHNI	A.MOHAMED
A1	2020-May-03	FIRST ISSUED	N.Vakilzadeh	F.MOHNI	A.MOHAMED

FOR APPROVAL

Client: شرکت توسعه آهن و فولاد گل گهر Golgohar Iron & Steel Development Co. G.I.S.D.Co

Consultant:

BARSOO CONSULTING and PROJECT MANAGEMENT برسو شرکت مهندسی

Job nr

Obsoleted from

Replaces

Project Name: Golgohar Steel Project

Family code/Machine code

Weight (Kg)

J (Kgm²)

Title: CONTROL LOGIC DIAGRAM FOR TRANSFER LINE

Scale

Client DWG Number: S-SM01-D-BOP-WWTP-DWG-IN-006 — Revision: 01

Format: A3

No. of sheets: 5

BARSOO DWG Number: 157DUGA2070003-01 — Revision: 01

Sheet: 5 OF 14

Follow

FUNCTION BLOCK FOR MOTOR CONTINUED

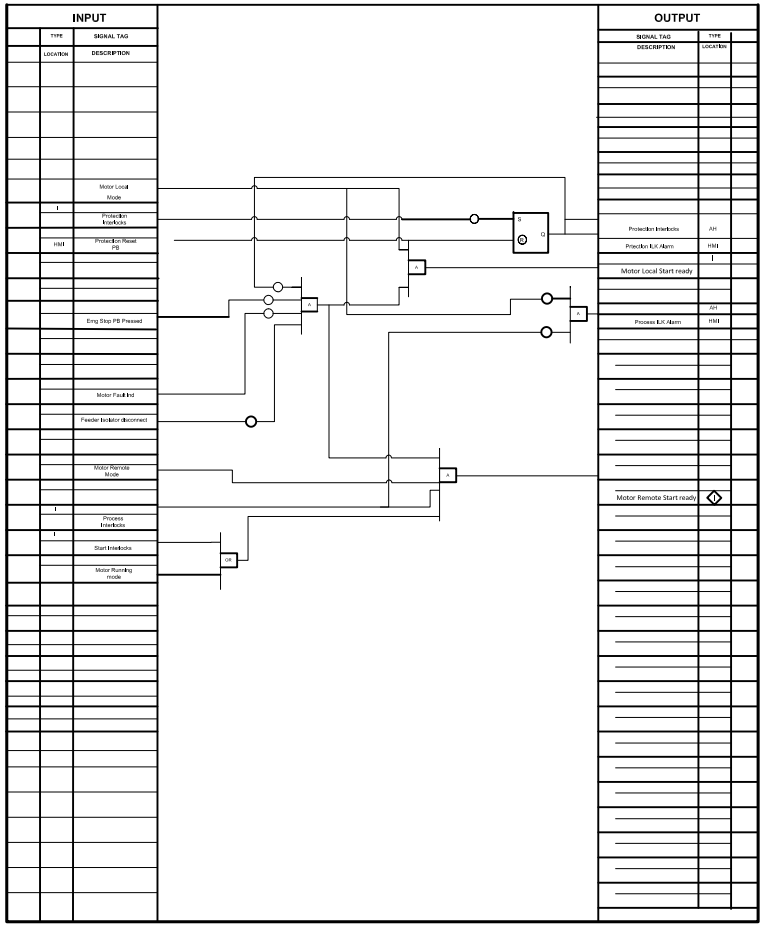

Rev.	Date	Revisions description	DESIGNED	Checked	Approved
01	2008-Jun-07		N.Vaidbuch	F.NIKAM	A.BONFARES
A1	2008-May-08	FIRST ISSUED	N.Vaidbuch	F.NIKAM	A.BONFARES

FOR APPROVAL

Client: شرکت توسعه آهن و فولاد گل گهر
Golgohar Iron & Steel Development Co.
G.I.S.D.Co

Consultant:

BARSOO
CONSULTING and PROJECT MANAGEMENT
برسو
شرکت مهندسی

Job n°
Obtained from
Replaces

Project Name: Golgohar Steel Project

Family code/Machine code

Weight (Kg)

J (Kgm²)

Title: CONTROL LOGIC DIAGRAM FOR TRANSFER LINE

Scale

Client DWG Number: S-SM01-D-BOP-WWTP-DWG-IN-006

Revision: 01

Format: A3

No. of sheets: 6

BARSOO DWG Number: 157DUGA2070003-01

Revision: 01

Sheet: 6 OF 14

Folder

FUNCTION BLOCK FOR VALVE

TYPE	SIGNAL TAG
LOCATION	DESCRIPTION
	Valve Open Failure
	Valve Close Failure
HMI	Valve Open PB
HMI	Auto/Man. Selector Switch (Auto=1)
I	
	F.O. Valve type
I	
	Auto Open
HMI	Valve Test Mode
HMI	Valve Close PB
HMI	Auto/Man. Selector Switch (Auto=1)
I	
	Auto Close
I	
	Open interlock
I	Close interlock
HMI	Valve fault HMI fault reset PB

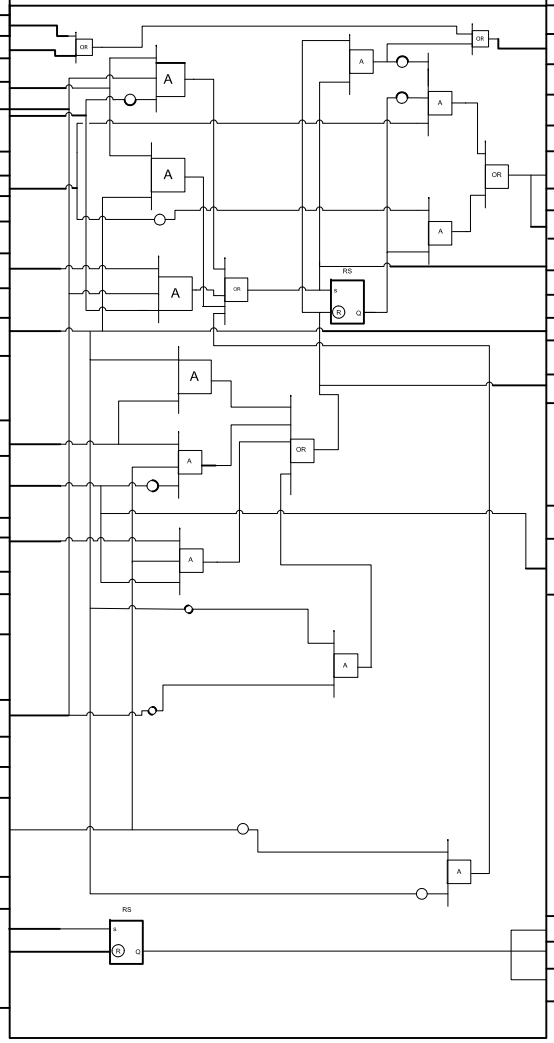

SIGNAL TAG	TYPE
DESCRIPTION	LOCATION
Valve fault	
Valve O/C Com.	
	E
Valve Command	HMI
Valve Open Com.	
	E
Valve test Mode	HMI
Valve Close Com.	
	E
Auto/Man Mode	HMI
Valve fault HMI	R
Valve Fault HMI	R
Valve fault HMI	R

Rev.	Date	Revisions description	DESIGNED	Checked	Approved
01	2020-Jun-01		N.Nikkhah	F.NIKNAM	A.MOMENIFAR
A1	2020-May-02	FIRST ISSUED	N.Nikkhah	F.NIKNAM	A.MOMENIFAR

FOR APPROVAL

Client: شرکت توسعه گاز و فولاد گل گهر Golgohar Iron & Steel Development Co. G.I.S.D.Co

Consultant:

BARSOO CONSULTING and PROJECT MANAGEMENT برسو شرکت مهندسی

Job nr:
Obsolete from:
Replaces:

Project Name: Golgohar Steel Project

Family code/Machine code:
Weight (Kg):
J (Kgm²):

Title: CONTROL LOGIC DIAGRAM FOR TRANSFER LINE

Client DWG Number: S-SM01-D-BOP-WWTP-DWG-IN-006
Revision: 01
Format: A3
No. of sheets: 7

BARSOO DWG Number: 157DUGA2070003-01
Revision: 01
Sheet: 7 OF 14
Folio:

FUNCTION BLOCK FOR VALVE CONTINUED

TYPE	SIGNAL TAG		SIGNAL TAG	TYPE
LOCATION	DESCRIPTION		DESCRIPTION	LOCATION
	Valve Open Com.			
	Open Position Feedback			
	Valve fault		Valve Open Indication	HMI
	Close Position Feedback			
	Valve Close Com.		Valve Close Indication	HMI
	F.O .Valve type		Valve Open failure	AH
	Valve O/C Com.			HMI
	Open Position Feedback			E
	Opening time		Open Position Switch	HMI
	F.O .Valve type		Valve Close failure	AH
	Valve O/C Com.			HMI
	Close Position feedback		Close Position Switch	E
	Closing time			HMI

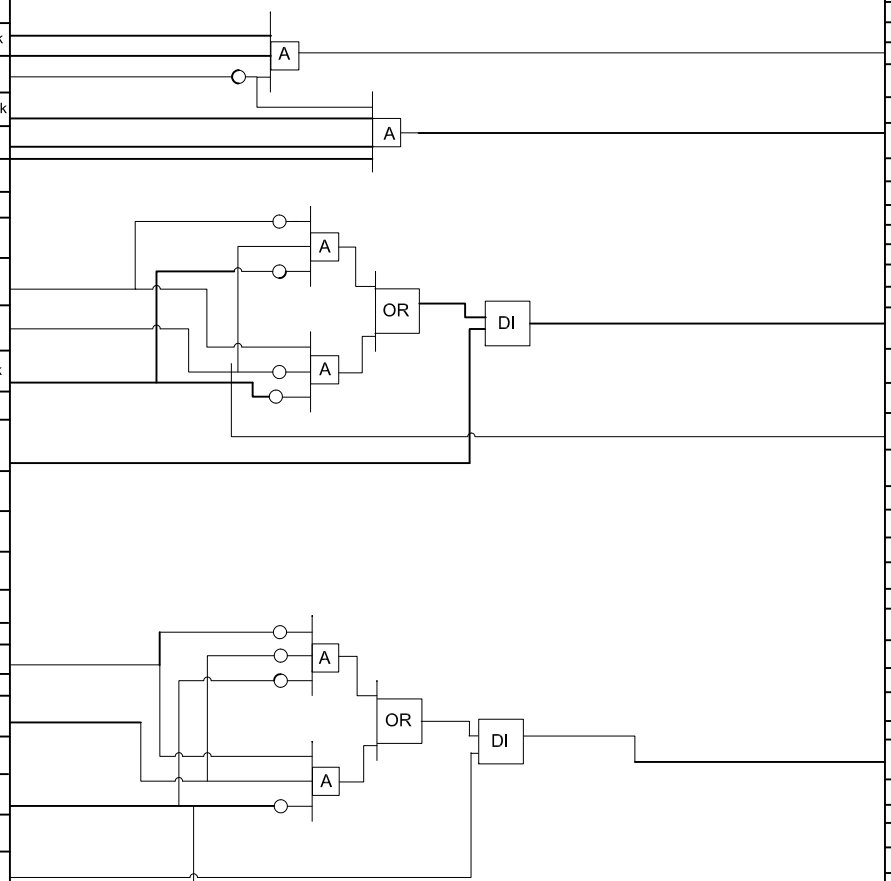

Note: "valve test selector" can be selected only by Engineering level(Authority)

Rev.	Date	Revisions description	DESIGNED	Checked	Approved
01	2006-Jun-01		N.Vakilzadeh	F.NIKNIA	A.MOMENIFAR
A1	2006-May-02	FIRST ISSUED	N.Vakilzadeh	F.NIKNIA	A.MOMENIFAR

FOR APPROVAL

Client: شرکت توسعه آهن و فولاد گل گهر Golgohar Iron & Steel Development Co. G.I.S.D.Co

Consultant:

BARSOO CONSULTING and PROJECT MANAGEMENT برسو شرکت مهندسی

Job nr

Obsoleted from

Replaces

Project Name: Golgohar Steel Project

Family code/Machine code

Weight (Kg)

J (Kgm²)

Title: CONTROL LOGIC DIAGRAM FOR TRANSFER LINE

Scale

Client DWG Number: S-SM01-D-BOP-WWTP-DWG-IN-006 — Revision 01

Format A3

No. of sheets 8

BARSOO DWG Number: 157DUGA2070003-01 — Revision 01

Sheet 8 OF 14

Folios

FUNCTION BLOCK FOR Analogue–LEVEL Alarm

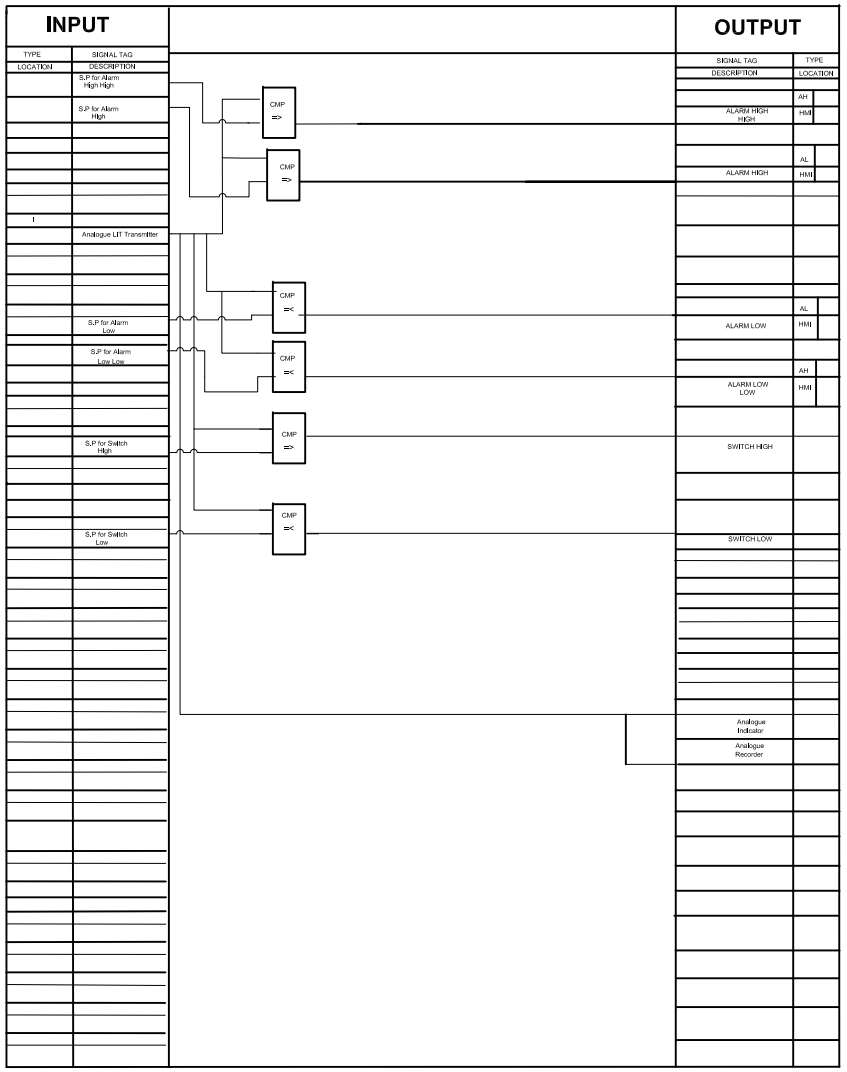

Rev.	Date	Revisions description	DESIGNED	Checked	Approved
01	2020-Jun-07		N.Nabizadeh	F.NIKNAM	A.MOWFARED
A1	2020-May-30	FIRST ISSUED	N.Nabizadeh	F.NIKNAM	A.MOWFARED

FOR APPROVAL

Client: شرکت توسعه آهن و فولاد گل‌گهر Golgohar Iron & Steel Development Co. G.I.S.D.Co

Consultant:

BARSOO CONSULTING and PROJECT MANAGEMENT برسو شرکت مهندسی

Job nr:

Obsoleted from:

Replaces:

Project Name: Golgohar Steel Project

Family code/Machine code:

Weight (Kg):

J (Kgm²):

Title: CONTROL LOGIC DIAGRAM FOR TRANSFER LINE

Scale:

Format: A3

Nr. of sheets: 9

Client DWG Number: S–SM01–D–BOP–WWTP–DWG–IN–006

Revision: 01

BARSOO DWG Number: 157DUGA2070003–01

Revision: 01

Sheet: 9 OF 14

Follow:

LOGIC DESCRIPTION

BRINE WATER TO TK-TA01-02, VALVE (SOV-1007)

INPUT

TAG NO	DESCRIPTION	LOCATION	SIGNAL TYPE
uzsc -1007	SOV-1007 Close Position	FIELD	DI
uzso -1007	SOV-1007 Open Position	FIELD	DI
	100-DRP-TA01-02-1 In Service	HMI	Logical
	100-DRP-TA01-02- 2 In Service	HMI	Logical
LIT-1003	Level Transmitter	FIELD	AI
LIT-1003	High Level set point	HMI	Logical
LIT-1004	Level Transmitter	FIELD	AI
LIT-1004	High Level set point	HMI	Logical
	100-DRP-TA01-02-1 In Service	HMI	Logical
	100-DRP-TA01-02- 2 In Service	HMI	Logical
LIT-1003	Level Transmitter	FIELD	AI
LIT-1003	Low Level set point	HMI	Logical
LIT-1004	Level Transmitter	FIELD	AI
LIT-1004	Low Level set point	HMI	Logical
LS-1003	Low Low Level Switch	FIELD	DI
LS-1004	Low Low Level Switch	FIELD	DI
	100-DRP-TA01-02-1 In Service	HMI	Logical
	100-DRP-TA01-02- 2 In Service	HMI	Logical

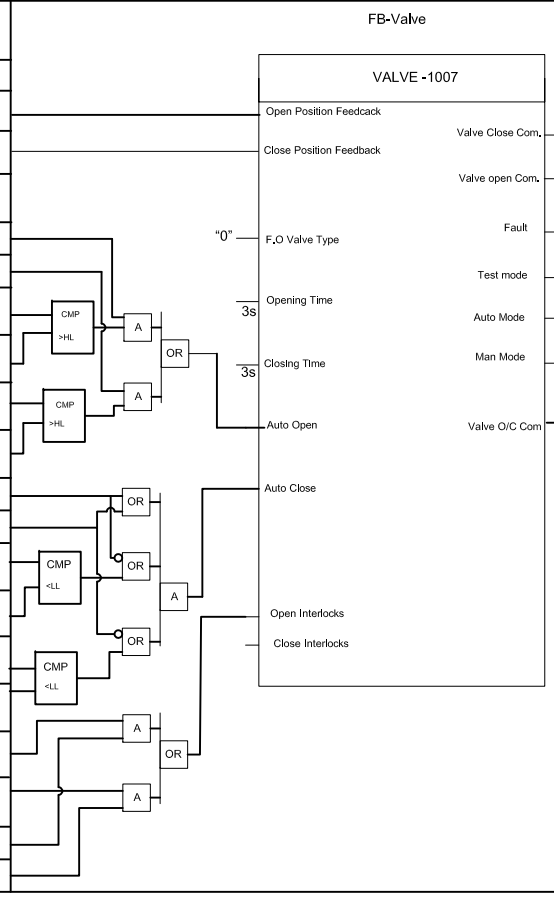

OUTPUT

LOCATION	TAG NO	DESCRIPTION	SIGNAL TYPE
FIELD	SOV-1007	Valve -1007 Close Command	DO
FIELD	SOV-1007	Valve -1007 Open Command	DO
FIELD	SOV-1007	Valve -1007 Open Close Command (Open =1)	DO

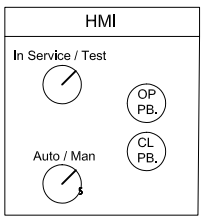

Rev.	Date	Revisions description	DESIGNED	Checked	Approved
01	2006-Jun-01		N.Mokhtarabadi	F.MIRNIA	A.MOKHTARI
A1	2006-May-01	FIRST ISSUED	N.Mokhtarabadi	F.MIRNIA	A.MOKHTARI

FOR APPROVAL

Client: Golgohar Iron & Steel Development Co. G.I.S.D.Co

Consultant:

BARSOO — شرکت مهندسی برسو — CONTRACTOR and PROJECT MANAGEMENT

Job nr

Supersed Items Replaces

Project Name: Golgohar Steel Project

Family code/Machine code

Weight (kg)

Title: CONTROL LOGIC DIAGRAM FOR TRANSFER LINE

Scale

Client DWG Number: S-SM01-D-BOP-WWTP-DWG-IN-006 — Revision 01

Format A3

No. of sheets 14

BARSOO DWG Number: 157DUGA2070003-01 — Revision 01

Sheet 10 OF 14

Follow

LOGIC DESCRIPTION

BRINE WATER TO TK-TA01-02, VALVE (SOV-1008)

INPUT

TAG NO	DESCRIPTION	LOCATION	SIGNAL TYPE
uzsc -1008	SOV-1008 Close Position	FIELD	DI
uzso -1008	SOV-1008 Open Position	FIELD	DI
	100-DRP-TA01-02-1 In Service	HMI	Logical
	100-DRP-TA01-02- 2 In Service	HMI	Logical
LIT-1003	Level Transmitter	FIELD	AI
LIT-1003	Low Level set point	HMI	Logical
LIT-1004	Level Transmitter	FIELD	AI
LIT-1004	Low Level set point	HMI	Logical
	100-DRP-TA01-02-1 In Service	HMI	Logical
	100-DRP-TA01-02- 2 In Service	HMI	Logical
LIT-1003	Level Transmitter	FIELD	AI
LIT-1003	High Level set point	HMI	Logical
LIT-1004	Level Transmitter	FIELD	AI
LIT-1004	High Level set point	HMI	Logical
LS-1003	Low Low Level Switch	FIELD	DI
LS-1004	Low Low Level Switch	FIELD	DI
	100-DRP-TA01-02-1 In Service	HMI	Logical
	100-DRP-TA01-02- 2 In Service	HMI	Logical

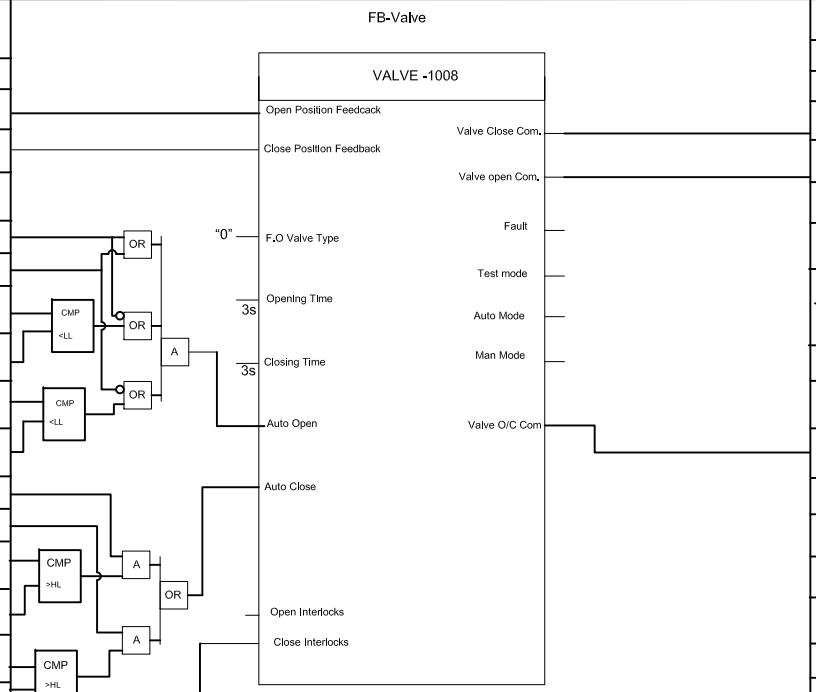

OUTPUT

LOCATION	TAG NO	DESCRIPTION	SIGNAL TYPE
FIELD	SOV-1008	Valve -1008 Close Command	DO
FIELD	SOV-1008	Valve -1008 Open Command	DO
FIELD	SOV-1008	Valve -1008 Open/ Close Command (Open =1)	DO

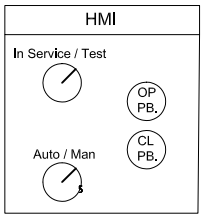

Rev.	Date	Revisions description	DESIGNED	Checked	Approved
01	2006-Jun-07		N.Nikitinskih	F.MIRMIR	A.MOMENEI
A1	2006-May-02	FIRST ISSUED	N.Nikitinskih	F.MIRMIR	A.MOMENEI

FOR APPROVAL

Client: شرکت توسعه آهن و فولاد گل گهر Golgohar Iron & Steel Development Co. G.I.S.D.Co

Consultant: BARSOO برسو شرکت مهندسی CONSULTING and PROJECT ENGINEERING

Job nº

Obsolete from

Replaces

Project Name: Golgohar Steel Project

Family code/Machine code

Weight (Kg)

J (Kgm²)

Title: CONTROL LOGIC DIAGRAM FOR TRANSFER LINE

Scale

Client DWG Number: S-SM01-D-BOP-WWTP-DWG-IN-006

Revision: 01

Format: A3

No. of sheets: 11

BARSOO DWG Number: 157DUGA2070003-01

Revision: 01

Sheet: 11 OF 14

Folios

INPUT

TYPE	SIGNAL TAG
LOCATION	DESCRIPTION
DI	XRL-PU-06A PU-06A Motor Running
Logical	PU-06A HMI Manual Start
Logical	PU-06A HMI Manual Stop
DI	XA-PU-06A PU-06A Feeder Fault Alarm
DI	I-01 TK-01 Low Level Interlock
DI	I-01-01 TK-01 High Level Interlock
Logical	Pump PU-06A In Standby mode
AI	LIT-1003
Logical	LIT-1003 H Set Point
Logical	100-DRP-TA01-02-1 In Service
AI	LIT-1004
Logical	LIT-1004 H Set Point
Logical	100-DRP-TA01-02-2 In Service
DI	I-01-01 TK-01 High Level Interlock
DI	I-01 TK-01 Low Level Interlock
Logical	Pump PU-06A In Standby mode
AI	LIT-1003
Logical	LIT-1003 L Set Point
Logical	100-DRP-TA01-02-1 In Service
AI	LIT-1004
Logical	LIT-1004 L Set Point
Logical	100-DRP-TA01-02-2 In Service
DI	LS-1003_Low Low Level Switch
AI	LIT-1003
Logical	LIT-1003 LL Set Point
	LS-1004_Low Low Level Switch
AI	LIT-1004
Logical	LIT-1004 LL Set Point
DI	PS-1005A
Field	PU-06A Discharge Low Pressure
Logical	Auto/Man selector(Auto=1)
DI	PU-06A Remote/Local
Logical	PU-06B Motor Running Ind.
DI	PU-06B Feeder Fault Alarm
DI	XXRL-PU-06A PU-06B Remote
DI	XXLL-PU-06A PU-06B Local

LOGIC DESCRIPTION

CLARIFIER UNDERFLOW PUMP (PU-06A)

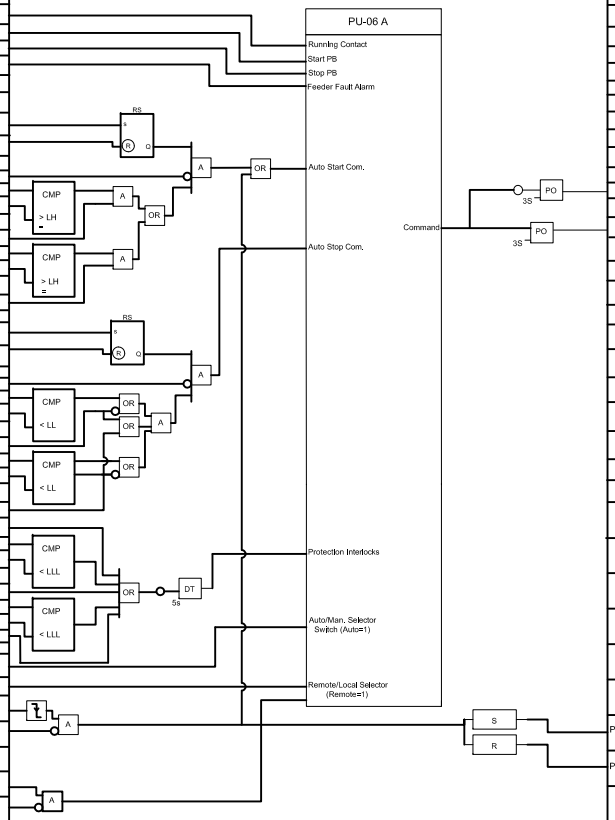

OUTPUT

SIGNAL TAG	TYPE
DESCRIPTION	LOCATION
HSL-PU-06A	DO
PU-06A Stop Command to MCC	MCC
HSH-PU-06A	DO
PU-06A Start Command to MCC	MCC

INPUT

TYPE	SIGNAL TAG
LOCATION	DESCRIPTION
DI	XRL-PU-06B PU-06B Motor Running
Logical	PU-06B HMI Manual Start
Logical	PU-06B HMI Manual Stop
DI	XA-PU-06B PU-06B Feeder Fault Alarm
DI	I- 01 TK-01 Low Level Interlock
DI	I-01-01 TK-01 High Level Interlock
Logical	Pump PU-06B In Standby mode
AI	LIT-1003
Logical	LIT-1003 H Set Point
Logical	100-DRP-TA01-02-1 In Service
AI	LIT-1004
Logical	LIT-1004 H Set Point
Logical	100-DRP-TA01-02-2 In Service
DI	I-01-01 TK-01 High Level Interlock
DI	I- 01 TK-01 Low Level Interlock
Logical	Pump PU-06B In Standby mode
AI	LIT-1003
Logical	LIT-1003 L Set Point
Logical	100-DRP-TA01-02-1 In Service
AI	LIT-1004
Logical	LIT-1004 L Set Point
Logical	100-DRP-TA01-02-2 In Service
	LS-1003_Low Low Level Switch
AI	LIT-1003
Logical	LIT-1003 LL Set Point
	LS-1004_Low Low Level Switch
AI	LIT-1004
Logical	LIT-1004 LL Set Point
DI	PS-1005B
Field	PU-06A Discharge Low Pressure
Logical	Auto/Man selector(Auto=1)
DI	PU-06B Remote/Local
Logical	PU-06A Motor Running Ind.
DI	XA-PU-06A PU-06A Feeder Fault Alarm
DI	XXRL-PU-06B PU-06B Remote
DI	XXLL-PU-06B PU-06B Local

LOGIC DESCRIPTION

CLARIFIER UNDERFLOW PUMP (PU-06B)

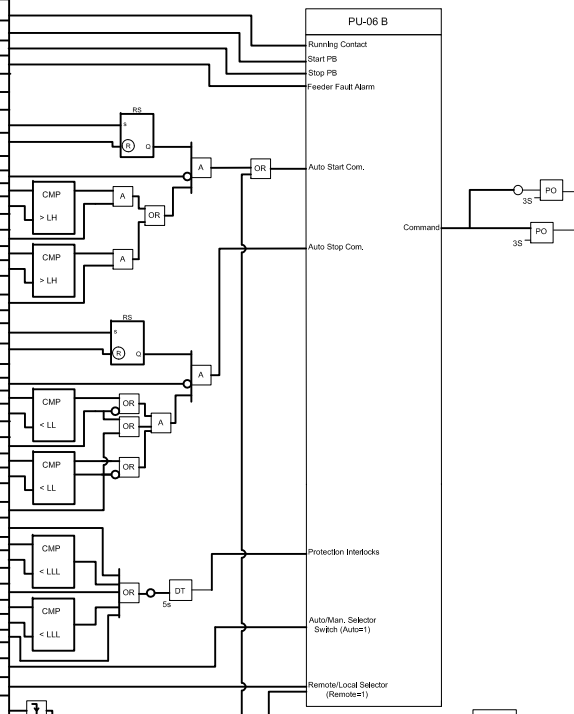

NOTE :

During Program development ,the Interlocks related to PU K64.3,4 AND PU K65.3,4,5 with LT-01-01 & LT 03-01 Including I-01 and I-03 and If required the necessary changes shall be implemented In Logic Diagram.

OUTPUT

SIGNAL TAG	TYPE
DESCRIPTION	LOCATION
HSL-PU-06B	DO
PU-06A Stop Command to MCC	MCC
HSH-PU-06A	DO
PU-06A Start Command to MCC	MCC

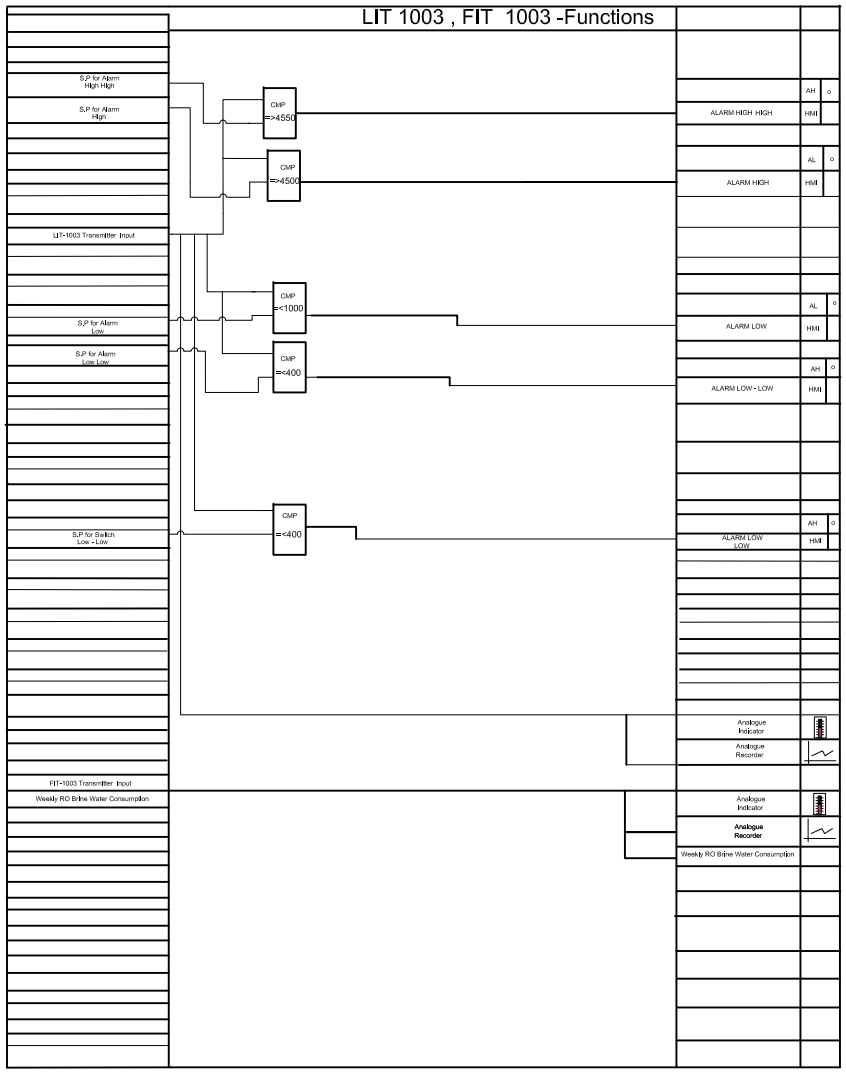

Rev.	Date	Revisions description	DESIGNED	Checked	Approved
01	2009-Jun-07		N.Hakimzadeh	F.NIKNAM	A.MOHAMED
A1	2008-Mar-06	FIRST ISSUED	N.Hakimzadeh	F.NIKNAM	A.MOHAMED

FOR APPROVAL

Client: شرکت توسعه آهن و فولاد گل گهر
Golgohar Iron & Steel Development Co.
G.I.S.D.Co

Consultant:

BARSOO
CONSULTING and PROJECT MANAGEMENT
برسو
شرکت مهندسی

Job nr
Obtained from
Replaces

Project Name: Golgohar Steel Project

Family code/Machine code

Weight (Kg)

Title: CONTROL LOGIC DIAGRAM FOR TRANSFER LINE

Scale

Client DWG Number: S-SM01-D-BOP-WWTP-DWG-IN-006

Revision: 01

Format: A3

No. of sheets: 14

BARSOO DWG Number: 157DUGA2070003-01

Revision: 01

Sheet: 14 OF 14

Follow